CWI LIGHTING

BRIGHTER LIVING. SIMPLIFIED.

PROJECT: _____

FIXTURE TYPE: _____

LOCATION: _____

CONTACT/PHONE: _____

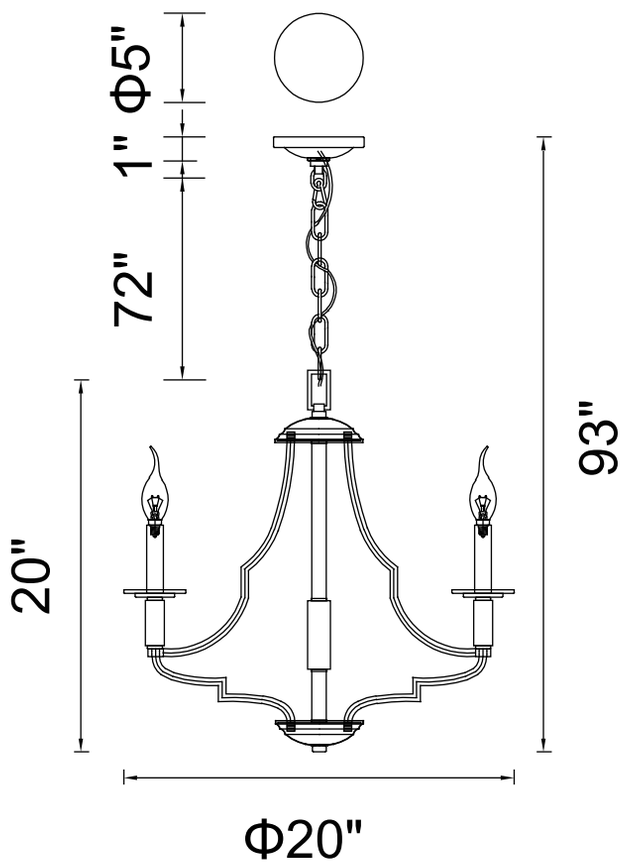

Item	9847P20-3-101
Collection	SCARLET
Finish	Black
Glass	------
Crystal	------
Input	120V AC,60HZ,AC

Shade	------
Length/Dia.	20"
Width/Ext.	------
Height	20"
Maximum	93"
Lumens	------

Light Source	E12
Bulb Info.	3×60W
Included	------
Dimmable	Yes
Color	------
Weight	

CWI LIGHTING
www.cwilighting.com
Info@cwilighting.com

140 Steelcase Rd.W.
Markham ON. L3R 3J9 Canada
Tel: 905 940 4999
Toll: 1-877-564-6034
Fax:905-940-0126
Toll Fax: 1-866-840-2796

Dallas showroom
Dallas Market Center
Showroom #: 3327
2100N. Stemmons Frwy.
Dallas, TX 75207